# RV8-S50

## 50W Regulated Single Output DC/DC Converter


Picture similar

RoHS

- 2" x 1" Package
- Wide 2:1 Input Range
- 1600VDC Isolation
- No Minimum Load Required
- Efficiency up to 92%
- Operating Temperature Range -40°C ~ +95°C
- Continuous Short Circuit Protection
- Over Current Protection, Over and Under Voltage Protection
- Metal Case, Optional with Heat-sink
- Soft Start, Adjustable Output
- Remote On/Off Control

| Output Specifications | |
|---|---|
| Voltage Accuracy | ±1%, max. |
| Output Voltage Adjustability (Trim) | Single Output: ±10% max. |
| Maximum Output Current | See table |
| Line Regulation | Single ±0.5% max. |
| Load Regulation | from 0% to 100% Load: ±0.5% max.<br>– |
| Cross Regulation (Dual Output) | – |
| Over Voltage Protection | 118 ~ 125% of Vout typ. |
| Over Current Protection | 120 ~ 140% of Iout max. |
| Short Circuit Protection | Indefinite (hiccup) (Automatic Recovery) |
| Ripple & Noise (20 MHz bandwidth) | 100mV pk-pk max. |
| Temperature Coefficient | ±0.02%/°C |
| Transient Recovery Time | 250µs typ. |
| Transient Response Deviation | ±3% max. |

| Input Specifications | |
|---|---|
| Voltage Range | See table |
| Start-up Time | 50ms typ. |
| No-Load/Full-Load Input Current | See table |
| Input Filter | C/L (see filter details on following pages) |
| Input Reflected Ripple Current | 20mA pk-pk typ. |
| Remote ON | 3.0 ~ 12VDC or open circuit |
| Remote OFF | 0 ~ 1.2VDC or short circuit pin 2 and 3 |
| OFF Idle Current | 5mA typ. |
| Surge Voltage (100 ms) †) | |
| 12V Models<br>24V Models<br>48V Models | 25VDC max.<br>50VDC max.<br>100VDC max. |

| General Specifications | |
|---|---|
| I/O Isolation Voltage (60 sec) | 1600VDC |
| Isolation Voltage Metal Case/Input&Output | 1600VDC |
| I/O Isolation Capacitance | 2000pF typ. |
| I/O Isolation Resistance | 1000M Ohm, min |
| Switching Frequency | 230 ~ 270kHz typ. |
| Humidity | 95% rel H |
| Reliability Calculated MTBF | >200KHrs<br>(MIL-HDBK-217 f) |
| Safety Standard(s) | UL60950-1 (approval), UL62368-1 (meet) |

| Environmental Specifications | |
|---|---|
| Operating Temperature Range | -40°C ~ +95°C (see Derating Curve) |
| Maximum Case Temperature | 110°C |
| Storage Temperature | -40°C ~ +125°C |
| Cooling | Natural Convection (optional Heat-sink) |
| Soldering Profile and Peak Temperature | Wave Flow: 260°C (1.5 mm from case), 10s, max. |

| Physical Specifications | |
|---|---|
| Case Material | Copper Black<br>Base Material: Non-conductive Black Plastic (UL94V-0 rated) |
| Pin Material | 1.0mm Brass Solder-coated |
| Potting Material | Epoxy (UL94V-0 rated) |
| Weight | 45.0g |
| Case Dimensions | 2.00" x 1.00" x 0.45" |

| EMC Specifications | |
|---|---|
| Radiated / Conducted Emissions | EN55032 Class A see EMI Filter |
| ESD | IEC 61000-4-2 Perf.Criteria A |
| Rad. RF | IEC 61000-4-3 Perf.Criteria A |
| EFT | IEC 61000-4-4 Perf.Criteria A |
| Surge | IEC 61000-4-5 Perf.Criteria A |
| Cond. RF | IEC 61000-4-6 Perf.Criteria A |
| PFMF | IEC 61000-4-8 Perf.Criteria A |
| VD/SI/VV | – |

†) These are stress ratings; exposure of devices to any of these conditions may adversely affect long-term reliability.
All specifications typical at $T_A$ = 25 °C, nominal input voltage and full load, unless otherwise specified.
The information and specification contained in this data sheet are believed to be correct at time of publication. However RSG accepts no responsibility for consequences arising from printing errors or inaccuracies. Specifications are subject to change without notice.



RSG Electronic Components GmbH
Sprendlinger Landstr. 115
D-63069 Offenbach, Germany

Tel. +49 69 984047-0
Fax +49 69 984047-77
info@rsg-electronic.de
www.rsg-electronic.de

we energize electronics!

## Number structure RV8

| RV8 | – | 24 | 05 | S | 15 | A | 1 | (W) | (K) |
|---|---|---|---|---|---|---|---|---|---|
| **Name / package** | | **V-input nom.** | **V-output** | **Output type** | **Power** | **Int. Code** | **Isolation** | **Wide-Input** | **Heat-Sink** |
| RV8 = 2" x 1" | | 12 = 9V~18V<br>24 = 18V~36V<br>or 9V~36V<br>48 = 36V~75V<br>or 18V~75V | 03 = 3.3V<br>05 = 5V<br>…<br>15 = 15V | S = Single<br>D = Dual | 30 = 30W<br>40 = 40W<br>…<br>60 = 60W | Logistics Code | 1 = 1.6 kVDC | _ = 2:1<br>W = 4:1 | _ = without<br>K = with |

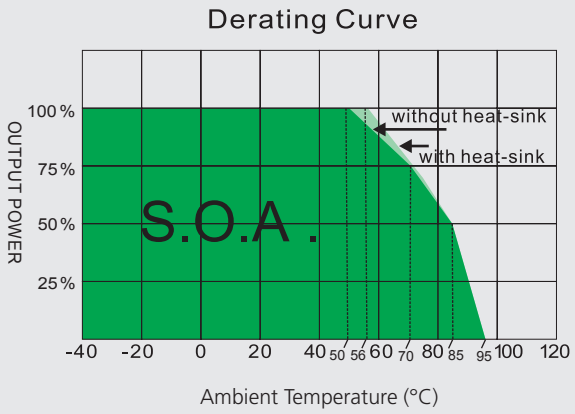


## Model Selection Guide

| Model Number | Input | Input Current | | Output | Output Current | | Efficiency | Capacitor Load |
|---|---|---|---|---|---|---|---|---|
| | Voltage Range (V DC) | No-Load (mA, max.) | Full Load (mA, typ.) | Voltage (V DC) | Min. Load (mA) | Full Load (mA) | @ Full Load (%, typ.) | @ Full Load (µF, max.) |
| RV8-1203S50A1 | 9-18, 12V Nominal | 120 | 3022 | 3.3 | 0 | 10000 | 91 | 26000 |
| RV8-1205S50A1 | 9-18, 12V Nominal | 170 | 4579 | 5 | 0 | 10000 | 91 | 17000 |
| RV8-1212S50A1 | 9-18, 12V Nominal | 50 | 4682 | 12 | 0 | 4167 | 89 | 3300 |
| RV8-1215S50A1 | 9-18, 12V Nominal | 50 | 4630 | 15 | 0 | 3333 | 90 | 2200 |
| RV8-2403S50A1 | 18-36, 24V Nominal | 70 | 1494 | 3.3 | 0 | 10000 | 92 | 26000 |
| RV8-2405S50A1 | 18-36, 24V Nominal | 90 | 2252 | 5 | 0 | 10000 | 92.5 | 17000 |
| RV8-2412S50A1 | 18-36, 24V Nominal | 40 | 2277 | 12 | 0 | 4167 | 91.5 | 3300 |
| RV8-2415S50A1 | 18-36, 24V Nominal | 30 | 2277 | 15 | 0 | 3333 | 91.5 | 2200 |
| RV8-4803S50A1 | 36-75, 48V Nominal | 50 | 747 | 3.3 | 0 | 10000 | 92 | 26000 |
| RV8-4805S50A1 | 36-75, 48V Nominal | 60 | 1126 | 5 | 0 | 10000 | 92.5 | 17000 |
| RV8-4812S50A1 | 36-75, 48V Nominal | 30 | 1145 | 12 | 0 | 4167 | 91 | 3300 |
| RV8-4815S50A1 | 36-75, 48V Nominal | 40 | 1138 | 15 | 0 | 3333 | 91.5 | 2200 |

The models listed above are standard types. If you need special specifications or have questions regarding packing or need application support, please contact our specialists: sales@rsg-electronic.de or +49 69-984047-0

# Test Configurations

## Input Reflected Ripple Current Test Step

Input reflected ripple current is measured through a source inductor Lin(12uH) and a source capacitor Cin(47uF, ESR<1.0Ω at 100KHz) at nominal input and full load.

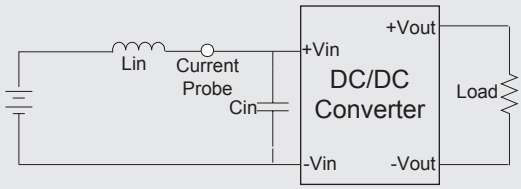


## Output Ripple & Noise Measurement Test

Use a 1μF ceramic disk capacitor at the output.

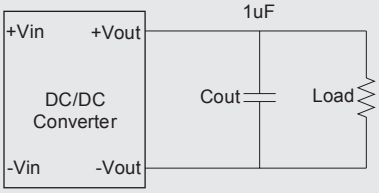


# Design & Feature Configurations

## Output Ripple & Noise Reduction

To reduce ripple and noise, it is recommended to use a 1uF ceramic disk capacitor and a 10uF electrolytic.

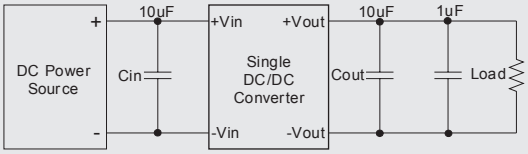


## CTRL Module ON / OFF

Positive logic turns on the module during high logic and off during low logic.
Ctrl module on/off can be controlled by an external switch between the ctrl terminal and -Vin terminal.
The switch can be an open collector or open drain.
For positive logic if the ctrl feature is not used, please leave the ctrl pin floating.

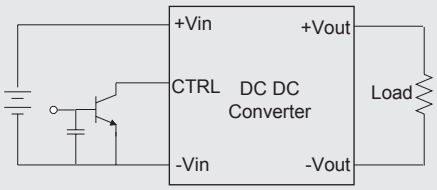


## Over Voltage Protection

The module includes an internal output over voltage protection circuit, which monitors the voltage on the output terminals. If this voltage exceeds the over voltage set point, the module will activate the control loop of internal circuit to clamp the output voltage.

## Over Current Protection

The module includes an internal over current protection circuit, which will endure current limiting for an unlimited duration during output over load condition. If the output current exceeds the OCP set point, the module will shut down automatically (hiccup).
The module will try to restart after shut down. If the over load condition still exists, the module will shut down again.

## Electrical Characteristic Curves

**RV8-1205S50**
Efficiency vs Output Current

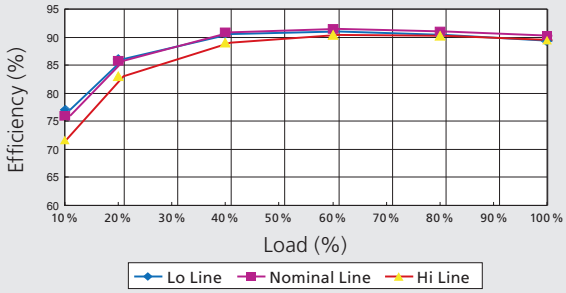


**RV8-2405S50**
Efficiency vs Output Current

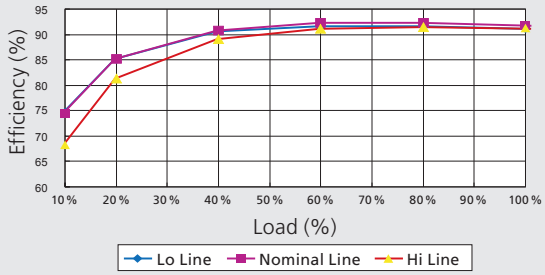


**RV8-2412S50**
Efficiency vs Output Current

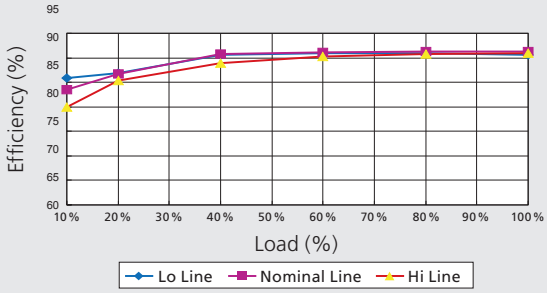


**RV8-4815S50**
Efficiency vs Output Current

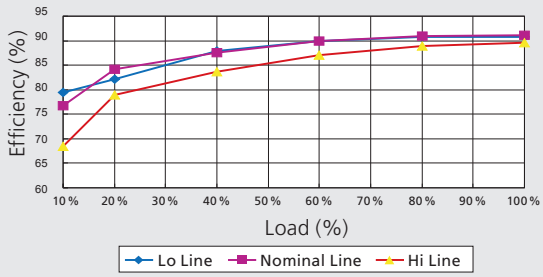


## Mechanical Specifications

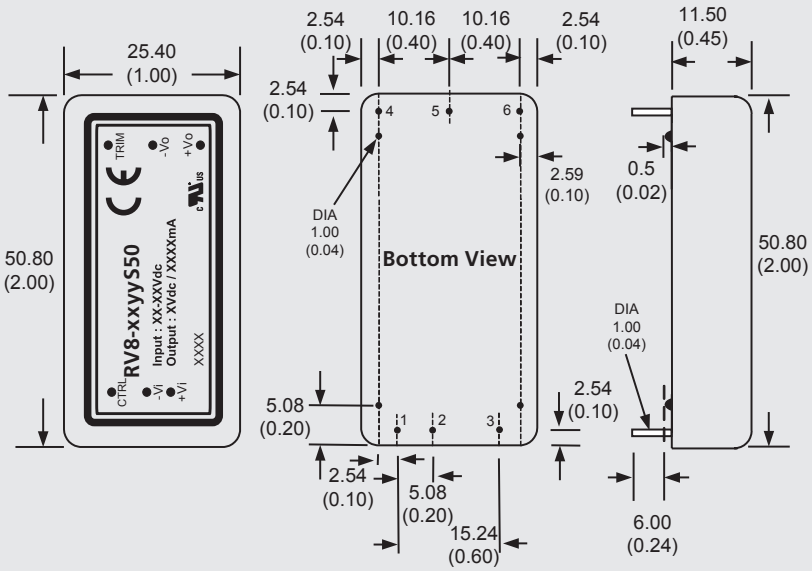


| Pin Connections | |
|---|---|
| **Pin Number** | **Single** |
| 1 | +V Input |
| 2 | -V Input |
| 3 | CTRL |
| 4 | +V Output |
| 5 | -V Output |
| 6 | Trim |

Notes: All dimensions are typical in millimeters (inches).
1. Pin diameter: 0.5±0.05 (0.02±0.002)
2. Pin pitch and length tolerance: ±0.35 (±0.014)
3. Case Tolerance: ±0.5 (±0.02)
4. Stand-off Tolerance: ±0.1 (±0.004)

### External Output Trimming

Output can be externally trimmed by using the method as below.

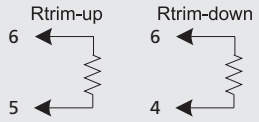

# Mechanical Specifications

## With Heat-sink

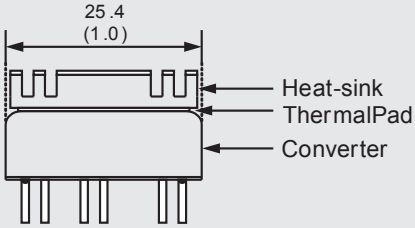


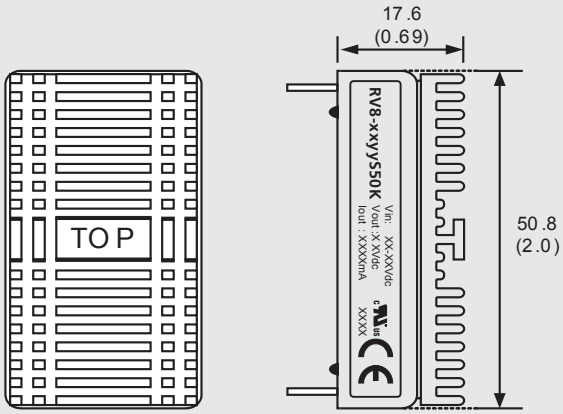


| | |
|---|---|
| Order code: | RV8-.....A1K (contain: heat-sink, thermal pad) |
| Material: | Aluminum |
| Finish: | Anodic treatment (black) |
| Weight: | 11 g (0.39oz) (without converter) |

Notes:
1. Converters will be supplied with heat-sinks already mounted.
Please contact factory for quotation.

## Notes

1. Measured with a 1.0µF ceramic capacitor.
2. Tested by minimal Vin and constant resistive load.
3. Tested by normal Vin and 25% load step change ( 75%-50%-25% of Io ).
4. Measured Input reflected ripple current with a simulated source inductance of 12µH and a source capacitor Cin (47µF, ESR<1.0Ω at 100KHz)
5. The remote on/off control pin is referenced to -Vin(pin2).
6. "Nature Convection" is usually about 30~65 LFM but is not equal to still air (0 LFM).
7. Exceeding the absolute ratings of the unit could cause damage. It is not allowed for continuous operating.
8. An external filter capacitor is required if the module has to meet IEC61000-4-4 and IEC61000-4-5.
The suggested filter capacitor is: Nippon chemi-con KY series, 220µF/100V.



RSG Electronic Components GmbH
Sprendlinger Landstr. 115
D-63069 Offenbach, Germany

Tel. +49 69 984047-0
Fax +49 69 984047-77
info@rsg-electronic.de
www.rsg-electronic.de